DRAWING No 2-81-042-00618

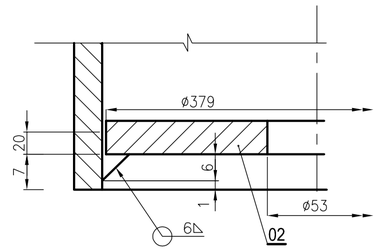

DETAIL -E

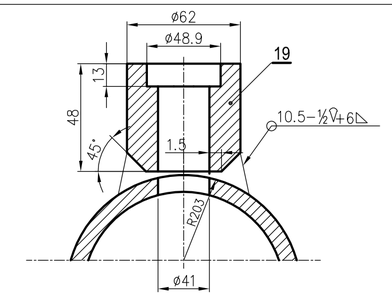

DETAIL-C

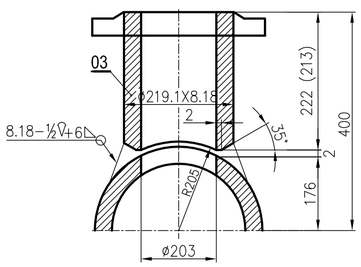

DETAIL-B

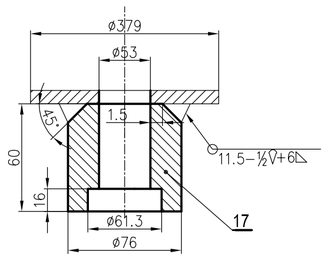

DETAIL-D

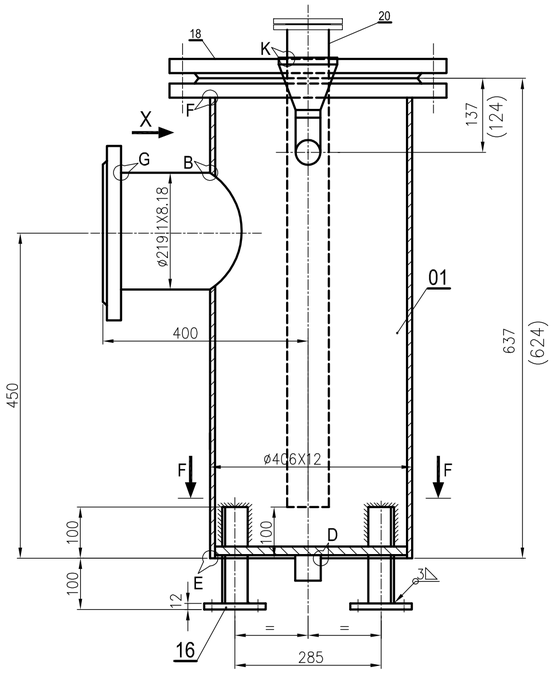

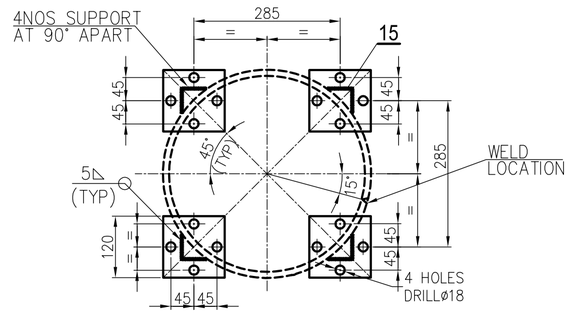

VIEW -FF

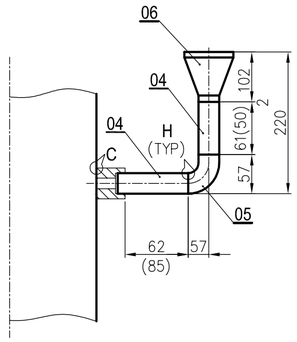

VIEW-X

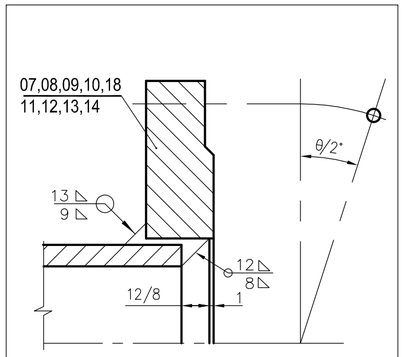

DETAIL-F/G

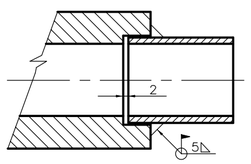

DETAIL -H

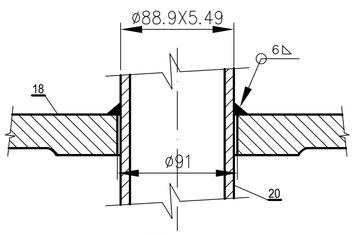

DETAIL-K

NOTES: –

ALL DIMENSIONS ARE IN MILLIMETRES

01 DESIGN PRESSURE : 1.5 KG/CM^2

02 DESIGN TEMPARETURE : 50°C

03 WORKING MEDIUM : WATER

04. ITEM Nos.04,15 & 20 ARE ISSUED IN RUNNING LENGTH.REQD.LENGTH IS TO BE CUT AND WELDED AT SHOP AS PER DRG.

05. FOLLOW APPLICABLE QP

06. THE WELD LOCATION SHOWN IS SUGGESTIVE.THE SAME SHALL BE SUCH THAT IT DOES NOT INTERFERE WITH NOZZLE.

ITEM NO.	DESCRIPTION	DRAWING NO.	ITEM NO. / VAR NO.	MATERIAL CODE / MATERIAL SPEC.	A / C	UNIT WT. / QTY.
20	PIPE OD 88.9X5.49 L=625	2-81-042-00618		15 951 073 0000	C	7|056
				SA 312 TP 316		1
19	SW STUB NB40	4-81-042-03338		15 324 245 0000	C	0|750
				SA 182 F316		1
18	COUNTER FLANGE NB 400; CL.150	4-81-042-03332		15 011 920 0700	C	75|441
				SA 240 TP 304		1
17	SW STUB NB50	4-81-042-03339		15 324 245 0000	C	0|937
				SA 182 F316		1
16	BASE PLATE 12 TK. 120x120x12	4-81-042-03334		15 011 132 0000	C	1|294
				IS 2062 Fe410 Gr.A		4
15	ISA 50x50x6; L=800	2-81-042-00618		15 013 156 0000	C	3|600
				IS 2062 Fe410 Gr.A		1
14	GASKET OD 270/ID 222 t=1.5	2-81-042-00618		22 020 099 0000		0|052
				IS 2712		1
13	NUT M20	41304 20000		41304 0002000		0|065
				IS 1367		8
12	BOLT M20x90	41215 20090		41215 2009000		0|283
				IS 1367		8
11	S.O.W FLANGE NB 200; CL.150	4-81-042-03331		15 011 910 0000	C	11|822
				SA 240 TP 304		2
10	GASKET OD 470/ID 411 t=1.5	2-81-042-00618		22 020 099 0000		0|116
				IS 2712		1
09	NUT M27	41301 27000		41301 0002700		0|166
				IS 1367		16
08	BOLT M27x120	41215 27120		41215 2712000		0|688
				IS 1367		16
07	S.O.W FLANGE NB 400; CL.150	4-81-042-03330		15 011 920 0700	C	41|122
				SA 240 TP 304		1
06	PLATE FORMED REDUCER OD 114.3x6.02/OD 48.3X5.08	4-81-042-03340		15 011 455 0000	C	2|681
				SA 240TP 316L		1
05	ASME B16.11 SW 90DEG ELBOW NB40 CL.3000	2-81-042-00618		92 524 693 0000	C	0|500
				SA 182 F 316		1
04	PIPE OD 48.3X5.08 L=150	2-81-042-00618		15 951 074 0000	C	0|821
				SA 312 TP 316		1
03	PIPE STUB OD 219.1X8.18 L=213	2-81-042-00618		15 951 079 0000	C	9|052
				SA 312 TP 316L		1
02	BOTTOM PLATE t=20 OD 379/ID 53	2-81-042-00618		15 011 440 0000	C	10|680
				SA 240 TP 304		1
01	ROLLED PIPE OD 406x12	2-81-042-00618		15 011 438 0000	C	74|810
				SA 240 TP 304		1

CUST NO. | REL NO.

TYPE OF PRODUCT OR NAME OF CUSTOMER/PROJECT

CAUTION: The information on this document is the property of BHARAT HEAVY ELECTRICALS LTD. It must not be used directly or indirectly in any way detrimental to the interest of the company

भा ह वि लि
BHEL

BHARAT HEAVY ELECTRICALS LIMITED
PIPING CENTRE
CHENNAI 600 017

	NAME	SIGN	DATE	NO.OF VAR.
DRN	S.AMBAJI RAO		31.12.09	
CHD	S.AMBAJI RAO		31.12.09	
APPD	C.V.NATHAN		31.12.09	

DEPT	GRADE OF UNTOL. DIM	SCALE	WEIGHT (KG)		ITEM No.
CODE	C/M/F	N.T.S	–	REF TO ASSY / OLD DRG. 2-81-042-00615	
TITLE: SEAL POT ASSEMBLY		CARD CODE: U 01		PC. DRAWING NO. 2-81-042-00618	REV 00

REV	DATE	ALTD	APPD	REV	DATE	ALTD	APPD
02				01			
ZONE				ZONE			

Size A2